The Chell 2432T is a complimentary product to our existing line of 2432, 2416, flightDAQ and microDAQ pressure scanner products.

Using the powerful Chell architecture and interfaces enables the 2432T to accurately measure 32 thermocouple inputs and the corresponding cold junction temperatures, convert the measurement to engineering units and then output the data over a number of configurable Ethernet interfaces. These interfaces can be the Chell protocol (TCP/IP or UDP), IENA, iDDS or Netscanner® emulation mode.

2432T

32 Channel Thermocouple Scanner

- **Acquisition system for 32 thermocouples**
- **Screw terminal inputs**
- **High integrity copper UTR design for accurate cold junction measurement**
- **Open circuit detection with advanced SIM (Sensor Impedance Measurement)**
- **1000V channel to channel isolation**
- **Individual ADC's allowing 24 bit synchronous acquisition**
- **User configurable outputs over Gbit Ethernet - iDDS, Chell Protocol, IENA, Modbus & Netscanner® compatibility.**
- **With IEEE 1588 PTP V2.**
- **250Hz per channel measurement frequency.**
- **Power-over-Ethernet (PoE) or DC supply (auto configuration).**
- **Fully configurable over Ethernet with embedded web server.**

The 2432T consists of 32 pairs M3 screw terminal inputs together with a ground connection per thermocouple. These inputs are embedded into a high-grade copper Uniform Temperature Reference (UTR) to ensure a uniform cold junction temperature.

The cold junction temperature is measured by multiple precision temperature sensors and RTD's to calculate the cold junction temperature across the UTR.

The hot junctions are measured by individual 24-bit high quality ADC's per channel. This not only allows us to acquire all channels synchronously but also gives greater than 1000V isolation between the channels.

The 2432T offers Open-Circuit-Detection (OCD) to detect breaks or shorts in the thermocouples and also Sensor-Impedance-Measurement (SIM) which uses a proprietary method the measure the total impedance of the thermocouple connected to scanner. This measurement is provided to the user as a useful system diagnostic and to assist in early thermocouple failure prediction.

Configuration of the inputs and the output stream is carried out via an embedded web server, using commands over the selected protocol or via an iDDS configuration server or by XML file download.

The user can choose between a number of standard look-up-tables (B,E,-J,K,N,R,S and T-Type) or enter their own for conversion to engineering units of their choice (maximum size 448 lines - downloadable from a CSV file).

The 2432T features a power supply that can use PoE or conventional DC.

Chell Instruments Ltd.
Folgate House, Folgate Road, North Walsham, Norfolk NR28 0AJ England

Tel: +44 (0)1692 500555 | Fax: +44 (0)1692 500088
sales@chell.co.uk | www.chell.co.uk

2432T Input Types

Input Type	Notes
Thermocouple	Type B, E, J, K, N, R, S, T
Connection type	2 x screw terminals (M3) plus 1 x GND terminal (M3) per channel
Open circuit detect (OCD)	Available on all channels
Sensor Impedance Measurement (SIM)	Available on all channels. Impedance measurements to within 10%.

2432T Input Specifications

Measurement type		
Voltage (±250mV FS)	Absolute maximum input	10 VDC
	Resolution	±0.03 µV or 0.001°C (K type)
	Accuracy[3]	< ±10 µV or 0.26°C (K type) or 0.27°C (N type)[2]
	Noise[1]	< 3 µV
	Common mode Voltage	1000V max
Cold Junction	Resolution	0.001°C
	Accuracy[3]	< 0.1°C
	Noise[1]	< 0.02°C
Cold Junction UTR Errors		< 0.15°C

2432T System Specifications

System resolution		24 bit
Dimensions		241.2 x 89 x 95.3mm (please contact us for a solid model)
Weight (with cable gland fitted)		2.6Kg
Environmental sealing		IP65 (with compressed cable gland or QDC option).
Measurement connector		Screw terminal (M3)
Measurement connector (QDC Option)		3 x TTI KPSE02E16-26SA206 (26 way)
Input supply	PoE	IEEE 802.3at / af
(auto selecting)	DC	24 to 50VDC (1.0A maximum at 24V)
Electrical connector		PT02A-14-15P
System timing		IEEE1588-2008 PTP V2 accurate to 1% of the acquisition frequency (±40 µS at 250Hz)
Operating temperature range.		-20 to+90°C (lower range can be extended if unit is powered first)
Maximum relative humidity		80% at 31°C (non-condensing)
Ethernet specification		Gigabit TCP or UDP (fixed or DHCP)
Cable gland		M32 x 15 Min cable size : 18mm, maximum cable size : 25mm.

2432T Interface Types

Interface types	
Chell protocol	32-bit floating-point engineering unit output (IEEE 754) via TCP or UDP max 250Hz (see manual 900204 for details)
IENA	UDP max 250Hz (see manual 900204 for details)
iDDS	Conforms to EIM 03869
Netscanner emulation	TCP / UDP max 250Hz, limited command set (please contact Chell for details)

NOTES :
1. The interface type is user selectable via the embedded web server.
2. Configuration can be via embedded web server, using commands via one of the above protocols or, for iDDS applications via an appropriate iDDS configuration server or by XML file download.

2432T Environmental Specifications

Ambient altitude	100 mbar abs (nominally 52000 ft)
Vibration	Engine standard vibration test to DO160G category S, curve W with duration of 1 hr/axis. Fan blade out case to DO160E category S, curve P.
	Fan blade out to DO160F section 7 (40g 11m/s)
	Engine load to +/- 40g per axis
Temperature	Engine temperature to DO160F section 4 cat D2 and section 5 cat A requirements
	General temperature -20 to+90°C
	Thermal transient : ±10°C/min
Radiated emissions	MIL standard 461-E: RE102
Conducted emissions	MIL standard 461-E/MIL standard 461-C

NOTES: To monitor the health and environment of the 2432T, the excitation supplies, internal temperature and internal absolute pressure are available over the embedded web server

QDC Option

Standard Option

Dimensions : Cable gland option

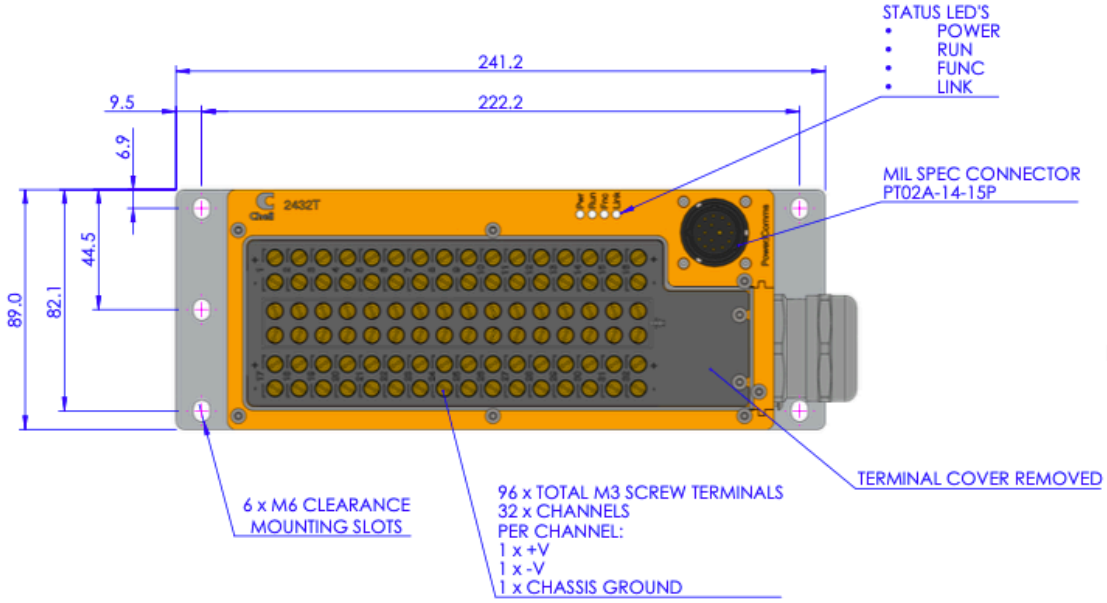

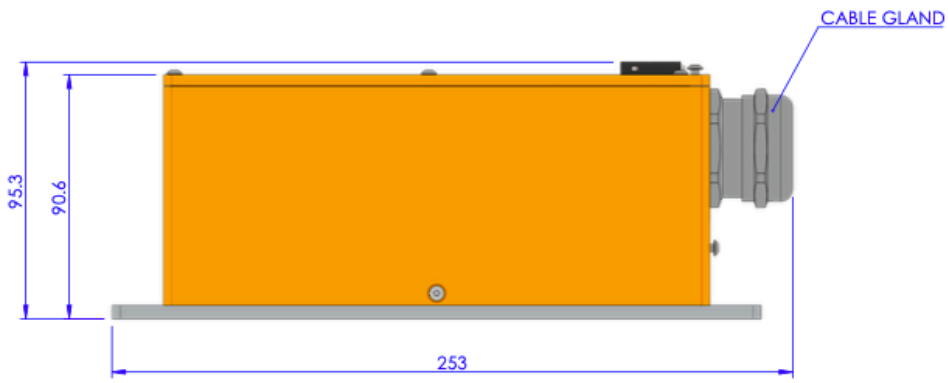

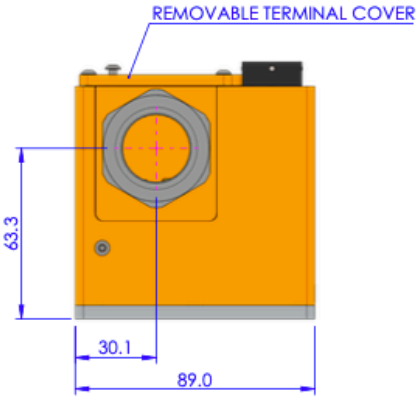

Part Number:

2432T-AABB

BB = Interface type
01 = Chell Interface, IENA, Modbus and Netscanner® Emulation
02 = Chell Interface, IENA, Modbus and Netscanner® Emulation and DDS
03 = Chell Interface, IENA, Modbus and Netscanner® Emulation and DDS (including DDS run time license).

AA = Cable entry
01 = Open ended case (no cable gland)
02 = Fitted with cable gland
03 = Fitted with K type thermcouple QDC
04 = Fitted with E type thermcouple QDC
05 = Fitted with N type thermcouple QDC
06 = Fitted with T type thermcouple QDC