www.teledyne-hi.com

TELEDYNE HASTINGS INSTRUMENTS
Everywhereyoulook™

THCD-101

INSTRUCTION MANUAL

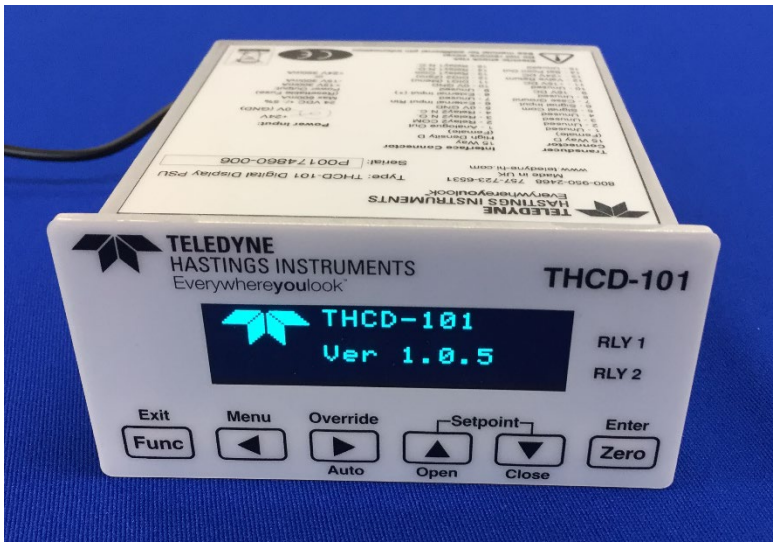

TELEDYNE
HASTINGS INSTRUMENTS
Everywhereyoulook™

ISO 9001
CERTIFIED

Manual Print History

The print history shown below lists the printing dates of all revisions created for this manual. The revision level letter increases alphabetically as the manual undergoes subsequent updates. Each new revision includes a revised copy of this print history page.

Revision A (Document Number 181-122018).....December 2018

Visit www.teledyne-hi.com for WEEE disposal guidance.

Description of Symbols and Messages used in this manual

WARNING: indicates a hazardous situation, which, if not avoided, could result in death or serious injury. Do not proceed beyond a WARNING notice until the indicated conditions are fully understood.

CAUTION: indicates a hazardous situation, which if not avoided, could result in minor or moderate injury. Do not proceed beyond a CAUTION notice until the indicated conditions are fully understood and met.

NOTICE: calls attention to a procedure or practice that if not correctly performed or adhered to, could result in equipment damage, loss of data, or inaccurate data.

NOTE: is used for tips and other digressions.

Hastings Instruments reserves the right to change or modify the design of its equipment without any obligation to provide notification of change or intent to change.

Table of Contents

1. GENERAL INFORMATION 5

1.1. FEATURES 6

1.2. SPECIFICATIONS 6

1.3. ACCESSORIES 7

1.3.1. Power Supplies 7

1.3.2. Cables 7

2. INSTALLATION AND SETUP 8

2.1. RECEIVING INSPECTION 8

2.2. MECHANICAL CONNECTIONS 8

2.2.1. Mounting 8

2.3. ELECTRICAL CONNECTIONS 9

2.3.1. Transducer socket Pinout – 15 Pin 'D' Connector 9

2.3.2. Interface Socket Pinout – 15 Pin HD 'D' Connector 10

2.3.3. USB Connector – USB Type-C 10

2.3.4. Power Input Jack 10

3. OPERATION 11

3.1. FEATURES 11

3.1.1. Analog Input 11

3.1.2. Setpoint Control 11

3.1.3. User Rezero 11

3.1.4. Adaptive Filtering 12

3.1.5. Analog Output 12

3.1.6. Alarm Relays 12

3.2. FRONT PANEL INTERFACE 12

4. REMOTE COMMUNICATIONS 16

4.1. WEBSERVER 16

4.1.1. Main page 16

4.1.2. Live data 16

4.1.3. Channel Configuration page 16

4.1.4. Control Configuration page 17

4.2. SERIAL & TCP COMMUNICATION 17

4.2.1. Introduction 17

4.2.2. Command/Query format 18

4.2.3. Main commands 18

4.2.4. Communication commands 20

4.2.5. Channel Setup commands 20

4.2.6. Filtering commands 21

4.2.7. Relay control commands *21*
4.2.8. Other commands *21*
4.2.1. Command Set Summary *22*
5. TROUBLESHOOTING 24
5.1. AUTHORIZED MAINTENANCE 24
5.2. TROUBLESHOOTING 24
5.2.1. Instrument Lists and Codes *24*
5.2.2. Possible Problems and Solutions *24*
6. WARRANTY 25
6.1. WARRANTY POLICY 25
6.2. RETURN POLICY 25
7. DRAWINGS 26

1. General Information

The THCD-101 is a multi-featured process display controller, capable of interfacing directly to a mass flow meter, mass flow controller or another process transducer such as the HVG-2020 Vacuum Transducer. The THCD-101 is a single channel unit which can be used to power a bipolar (±15Vdc @ 300mA) or unipolar (24Vdc @ 400mA) device. The THCD-101 can display the output from a transducer that supplies voltage signals up to 10 VDC or 4 – 20 mA current signals. There is also an input that can be used for external command (setpoint) control (+10Vdc full scale). Digital interfaces to the THCD-100 include USB (Serial Port Emulation) and Ethernet.

Hastings vacuum instruments do not require any periodic maintenance under normal operating conditions with clean gases. No damage will occur from the use of moderate overpressures (< 25 psig).

The following sections contain the steps needed to get a new power supply operating as quickly and easily as possible. Please read the following thoroughly before attempting to install the instrument.

NOTICE: The instruments described in this manual may be available with multiple pin-outs. Ensure that all electrical connections are correct.

NOTICE: The instruments described in this manual are designed for INDOOR use only.

NOTICE: The instruments described in this manual are designed for Class 2 installations in accordance with IPC standards.

CAUTION: There are no operator serviceable parts or adjustments inside the product.

CAUTION: If this equipment is used in a manner other than that specified, the protection provided by the equipment may be impaired.

1.1. Features

± (0.02% Reading + 0.01% FS) Accuracy. The displayed valued is a highly accurate representation of the analog input value.

0-5 Vdc, 0-10 Vdc Set Point Via Front Panel Or Digitally (USB/Ethernet). The desired control setpoint can be set locally or via a remote computer.

Dual Programmable Alarms with Relays. The THCD-101 provides two double throw relays with 2A (@30 Vdc) switching capacity and 220Vdc max switching voltage.

USB, Ethernet and Analog Output (Standard). The THCD-101 has multiple ways to provide the user with a remote indication of the controlled parameter.

6 Digit Graphical Display. The display provided with THCD-101 can provide the user simultaneous indications of the magnitude of the controlled parameter, unit of measure, valve over-ride status and alarm status.

1.2. Specifications

WARNING: Do not operate instruments exceeding the specifications listed below. Failure to heed this warning could result in serious personal injury and/or damage to the equipment.

Display Range:	**6**-digit value including decimal point, 99999 max value
Analog Input	-10.8 Vdc → +10.8 Vdc, Input Impedance > 100 kΩ
Measurement Accuracy:	±(0.02% Reading + 0.01% FS)
Setpoint Output	0 – 10 Vdc, Accuracy ±(0.03% Reading + 0.01% FS)
Operating Temperature:	5°C to 60°C
Humidity:	max 90 %RH @ 50°C, non-condensing
Power Requirements:	24 VDC ±5%, 600 mA minimum Class 2 power 150 VA max fused

NOTICE: Use of an underpowered or under-voltage supply could result in equipment damage.

CE Mark	EN55011, EN61326, EN61010
RoHS Compliant	YES
Weight (approx.):	0.44 lb. (0.2 kg)
Dual Alarm Relays:	2A (@30 Vdc) switching capacity and 220Vdc max switching voltage
Connectors:	2.1 x 5.5mm bayonet-style power jack (power) 15-pin “D” connector (Transducer connection) 15-pin high density “D” connector (Relay connections) USB type-C (virtual COM port for serial communications) RJ45 (Ethernet communications)

1.3. Accessories

1.3.1. Power Supplies

Hastings offers power supplies that convert 100, 115 or 230VAC to the 24Vdc voltage required to operate the THCD-101 and have a circular power plug that will mate with the power jack on the back of the THCD-101. 24VDC power supply (P/N 12-01-169).

1.3.2. Cables

Hastings offers interface cables to connect the THCD-101 up to Hastings 200/300 series flow instruments with the standard 15 pin D Connector or the 9 pin D connector used on the 24 Volt versions as well as the HVG-2020 series of vacuum gauges

±15 Vdc Flow Instruments – 15 pin D connector (std H Pinout)

Stock#	**Length**
65-431	18 inches
65-576	4 feet
65-149	8 feet
65-148	25 feet
65-160	50 feet
65-193	100 feet
65-576-SPECIAL	Custom Length cable

±15 Vdc Flow Instruments – 15 pin D connector (U Pinout)

Stock#	**Length**
65-791	8 feet
65-791-99	Custom Length cable

24 Vdc Flow Instruments (includes D300B series) –9 pin D connector

Stock#	**Length**
CB-AF-8-24VM	8 feet
CB-AF-xxx-24VM	Custom Length cable

IP-67 Digital Flow Instruments – 12 pin Circular connector

Stock#	**Length**
CB-12PCF-8-AM	8 feet
CB-12PCF-XXX-AM	Custom Length cable

HVG-2020 – 9 pin D connector

Stock#	**Length**
CB-AF-8-HVG9M	8 feet
CB-AF-xxx-HVG9M	Custom Length cable

Digital AVC – 15 pin High Density D connector

Stock#	**Length**
CB-DAVC-8-AM	8 feet
CB-DAVC-XXX-AM	Custom Length cable

More information about the power supplies and cables can be found on the Hastings web site: http://www.teledyne-hi.com

2. Installation and Setup

This section contains the necessary steps to assist in getting a new vacuum gauge into operation as quickly and easily as possible. Please read the following thoroughly before attempting to install the instrument.

2.1. Receiving Inspection

Prior to opening, inspect for obvious signs of damage to the shipment. Immediately advise the carrier who delivered the shipment if any damage is suspected. If the shipment has arrived intact, carefully unpack the gauge and any accessories that have been ordered. Check each component shipped with the packing list. Ensure that all parts are present (i.e. gauge, power supply, cables, etc.). Optional equipment or accessories will be listed separately on the packing list.

2.2. Mechanical Connections

2.2.1. Mounting

NOTICE: The THCD-101 should be installed in a clean and careful manner. Take care not to drop the product and avoid impacts to prevent damage.

The THCD-100 can be panel mounted, or used on a bench top and is a standard 96 x 48mm panel meter enclosure. Note that the instrument must always be situated in such a way as to enable adequate air circulation about the unit. If a transducer was supplied with the THCD-101, a suitable cable may have been included.

A panel mount kit will have been supplied with the instrument. This consists of two screws (M3x6), two brackets and two screws (50mm). Fit the M3x6 screws into the side of the unit into the diagonally opposed holes. Do not tighten these screws, to allow the bracket to slide over the screw head. Thread locking adhesive may be used but is not required, as these screws cannot rotate once the bracket is tightened. Insert the meter into the panel. A cutout of 3.63” x 1.84” (92 x 45mm) is recommended. Slip the mounting bracket over the screw head and tighten the 50mm screws. The unit should now be secure.

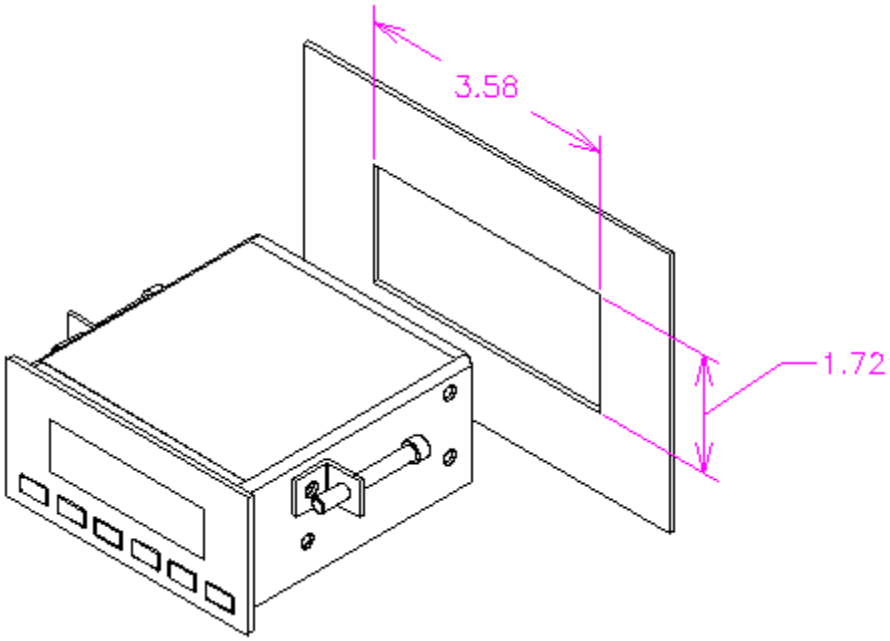

2.3. Electrical Connections

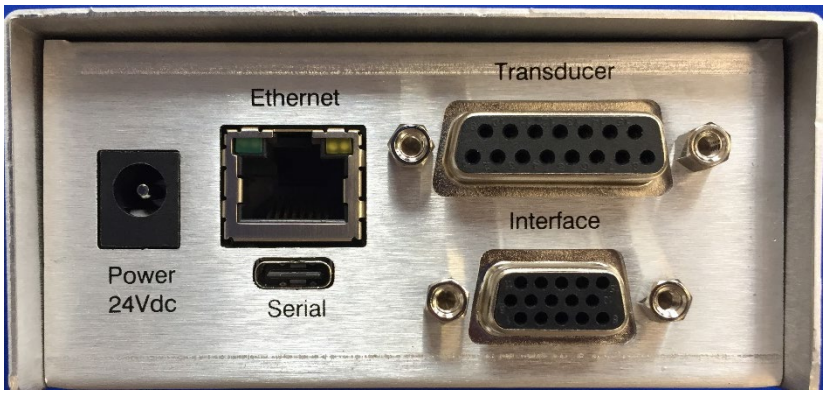

2.3.1. Transducer socket Pinout – 15 Pin 'D' Connector

Pin Number	Designation
5	Signal Common
6	Signal In (Vdc, mA)
7	Case Gnd
9	-15 VDC
11	+15 VDC
12	Valve Return
13	+24 VDC
14	Set Point Out (VDC)
All other pins	Not Connected

If the transducer is being powered from another source (e.g. a mains powered supply), it will only be necessary to connect to the two signal pins. Note: The THCD-100 has a floating differential input. For single ended use

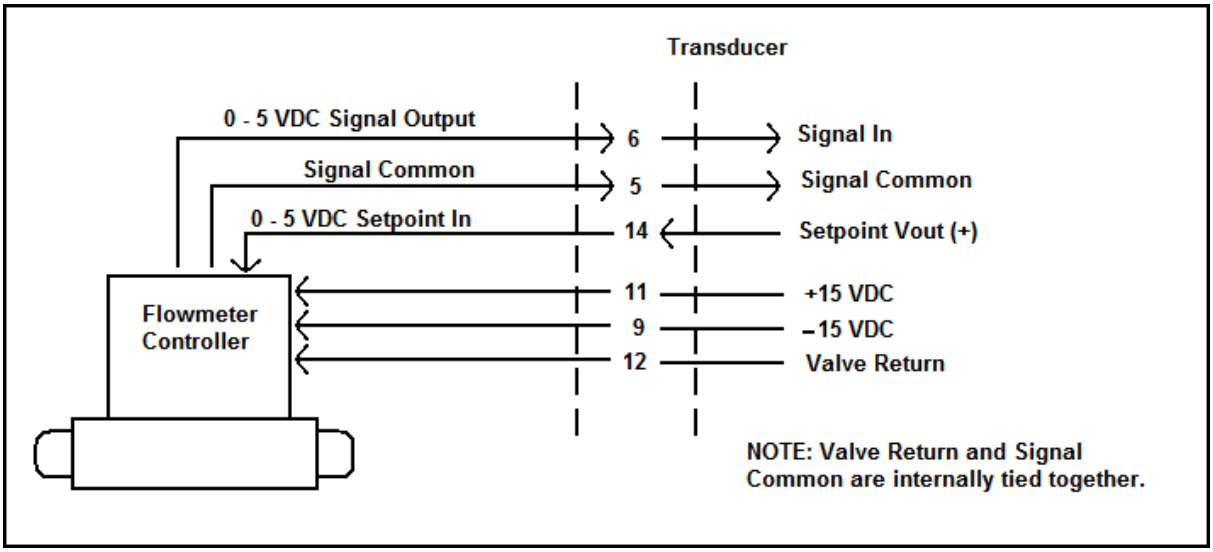

(i.e. transducers with differential output) join 0V (pin5) & Signal Return (pin12) at the transducer. Ensure the common mode input range is not exceeded.

2.3.2. Interface Socket Pinout – 15 Pin HD 'D' Connector

Pin Number	Designation
1	Analog Output
2	Relay 2 Common
3	Relay 2 Normally Open contact
4	Relay 2 Normally Closed contact
5	0V (Signal Ground)
6	External Setpoint Return
7	N/C
8	External Setpoint
9	N/C
10	0V (Signal Common)
11	TTL Input - Disable Menu
12	TTL Input - Disable Zero
13	Relay 1 Common
14	Relay 1 Normally Open contact
15	Relay 1 Normally Closed contact

2.3.3. USB Connector – USB Type-C

The Serial connector supports USB-C 2.0 cables without the SuperSpeed pairs. Therefore connecting a fully featured USB-C 3.1 cable will not provide SuperSpeed functionality, although the cable will still work as per the USB 2.0 specification. When connected via the USB port, the THCD-101 will emulate a standard serial port. The fixed baud rate is 57600 with other settings as follows: 8 data bits, 1 stop bit, No parity, No handshaking.

2.3.4. Power Input Jack

The panel meter display requires a 24Vdc ± 5%, 600mA supply to operate. This must be a rectified and regulated direct current supply capable of supplying at least 1.1 Amp during the turn on surge. Although the THCD-101 has an internal fuse and power supply overload shutdown protection, the supply to the THCD-101 should be protected by fuse or other suitable electronic method.

For convenience, Hastings offers a compatible supply (12-01-169) that, when matched with the US (12-01-160), Euro (12-01-164) or the UK (12-01-165) plug adapters, converts wall power to specified levels

A standard 5mm diameter 'dc power jack' is required to connect to the THCD-101.

Connect the positive conductor to the center pin. Connect the negative (0V) conductor to the outer of the jack.

WARNING: Ensure correct power supply rating and polarity. Do not use a partially assembled or faulty unit. Incorrect use of this equipment, or use in a manner not specified may impair the user's protection.

3. Operation

3.1. Features

This section describes the principles used in the THCD-100. It details the various settings for the inputs and the outputs including setpoint control. It does not detail any servicing or calibration procedures.

3.1.1. Analog Input

The analog input signal sent by the process sensor and received by the THCD-101 is scaled via front panel controls to indicate a process value on the front panel in user selectable units. The user defines what the full-scale process value is and what analog signal would be received from the sensor to indicate this full-scale process value. The full-scale analog signal input value is configurable via front panel menu for any value from 0 to 10 Vdc (20 mA for 4 – 20 mA units). The THCD-101 will show the over-range error ("RANGE") when the analog input is more than 15% over the full-scale analog value.

The secondary input is used to accept an external command setpoint and has a non-configurable full scale of 10V. This input is used when the setpoint is set to the slave source.

3.1.2. Setpoint Control

The THCD-101 has an analog output that is used for command setpoint to control a mass flow controller or similar device. The setpoint command output has a voltage full scale that matches the input channel configuration.

Example - If the input channel is setup for a 100 slm, 5V full-scale device, and the setpoint value is 10.0 slm (assuming setpoint is in Auto mode and not a slave source), then the output voltage of the setpoint would be 0.5V.

The setpoint does have some configuration parameters that can be used to alter the function of the setpoint control and they are detailed as follows:

(a) Setpoint Mode - The setpoint can be configured in one of three modes – Auto, Open and Closed.

In Auto mode the setpoint output is dependent on the setpoint source and value settings (see below).

In Open mode the setpoint outputs a voltage greater than the full scale of the device. For a setpoint command full scale of 5V or less, the output in this mode is 7V. For any other setpoint command full scale (e.g. 10V), the output in this mode is 12V.

In Closed mode the setpoint outputs a voltage less than the minimum output voltage of most devices, the setpoint output voltage is –0.25V.

(b) Setpoint Source - The setpoint source dictates where the setpoint value comes from, assuming the mode is set to Auto (see above). This can be one of two possibilities – Internal or Slave.

Internal source – the setpoint uses the value set internally via the '▲' & '▼' switches or via the externals comms.

Slave source – in this case the setpoint uses a percentage of an externally produced value. The percentage is set via the '▲' & '▼' switches and the external value comes from the secondary input channel (as mentioned above)

3.1.3. User Rezero

Over time, it is possible that the input will 'drift' slightly due to various conditions (temperature changes, etc.). As such, it may be necessary for the channel to be re-zeroed by the user.

The user re-zero function is provided for this task. It simply takes the current reading (sampled and averaged over 3 seconds) and uses that as an additional offset for the channel in question, subtracting the value from all

subsequent readings. Ensure any process value to be zeroed, is in fact truly zero before performing this function. This would mean isolating flow devices or fully pumping a pressure device.

Note that the user communicating with the THCD-101 unit remotely using the USB or Ethernet communication ports can also clear a previously entered user re-zero value. This should be used before any input calibration is performed to ensure that the calculated calibration points are not distorted by the user zero offset.

3.1.4. Adaptive Filtering

The THCD-101100 includes an adaptive averaging filter on the display and remote communication readings to aid in 'smoothing out' unwanted 'noise' on the displayed readings.

(a) Operational band

The filter can be configured to filter values that are within a certain band, meaning that excursions between subsequent readings that fall outside that band are shown as non-filtered readings. The band is configurable between 0.01% and 1.00% of the full-scale range of the input channel. The filter can be set to OFF, which means that no filtering is performed and can be set to ON which means that filtered value is always shown, no matter how big of an excursion occurs.

(b) Filter size

The size of the filter is currently configurable between 0 and 6 seconds and simply indicates the amount of readings that are taken and buffered to calculate and show the averaged reading. A filter size of 0 will naturally turn off the filtering, irrespective of the band setting. If the buffer size is greater than 5 seconds, filter is turned ON, meaning that filtered data will always be shown.

3.1.5. Analog Output

The analog process measurement input value received from the attached sensor is retransmitted to the user and available on the Interface Socket. This output can be used for data logging purposes or for providing an external setpoint control to another THCD-101 or similar instrument.

3.1.6. Alarm Relays

The THCD-101 has two internal alarm relays. Each relay has Common, Normally Open, and Normally Closed contact connections available on the Interface Socket. Each relay will switch positions when the displayed process variable changes from below the previously set Trip Point value to above the Trip Point + the Hysteresis value. The relay will change back when the process value drops below the Trip Point – the Hysteresis value.

3.2. **Front Panel Interface**

(a) Main Screen (not changing Setpoint)

The main screen shows the main channel input data (with range, full-scale and calibration applied) and the associated units string. If an input is over range (more than 15% above full-scale voltage) then the data value is replaced with the over range error – "RANGE". This screen also shows the current mode of the setpoint, if not in AUTO (i.e. OPEN or CLOSE). If either of the relays have been tripped then they are also indicated as such on the far right of the screen.

Switch Functions:

Func	No function
◄	Go to Main Menu screen
►	Enable setpoint mode override, active for 2 seconds
► (override mode)	Change setpoint mode to AUTO
▲	Change setpoint value (main screen changes as below)
▲ (override mode)	Change setpoint mode to OPEN
▼	Change setpoint value (main screen changes as below)
▼ (override mode)	Change setpoint mode to CLOSE
Zero	Perform input rezero (if held for 3 seconds)

(b) Main Screen (changing Setpoint)

When performing a setpoint change, the main screen is as previously, but with the addition of the current setpoint value (initiated via an initial press of the '▲' or '▼' switches). Note that the setpoint value is not permanent – if the '▲' or '▼' switches are not pressed at all for 3 seconds, then the setpoint value disappears.

(c) Main Screen (Setpoint Valve Control)

Rather than commanding the setpoint to a specific value, the setpoint mode can be changed to Open or Closed which overrides any previously set value. Again the main screen shows everything as normal, but with the addition of the OPEN or CLOSE identifier if this mode has been set. By putting the device into override mode it is possible to force the setpoint to be Open or Closed. This is done by pressing the override switch then the appropriate mode switch. Either mode can be cancelled by switching back to Auto mode (by effectively pressing the override switch twice).

(d) Main Menu Screen

The Main Menu screen allows the user to select screens that are used for the configuration of the THCD-101 – the setpoint (initial value, initial mode, source), input (range, full scale, units string), comms, filtering and relays can all be configured from screens selected via the main menu. It is also possible to reset settings to their factory defaults from the Main Menu screen. Only 4 options can be shown on the screen at any one time, so the menu list scrolls up until the last item is shown, and then the selection arrows move down to allow for selection of any menu item.

Switch Functions:

Func	Go back to Main screen
◄	No function
►	No function
▲	Go to previous menu selection
▼	Go to next menu selection
Zero	Go to screen associated with menu selection

(e) Setpoint Screen

From the setpoint screen you can edit the value of the command setpoint as well as change the mode (AUTO, OPEN, CLOSED) and the source (INTERNAL, SLAVE). If SLAVE is selected then the percentage sign (%) appears next to the SP value. For more information on the command setpoint, see the Principles section - 7.4.

Switch Functions:

Func	Go back to Main Menu screen
◄	Select previous character when in edit mode
►	Select next character when in edit mode
▲	Move edit field selection up
▼	Move edit field selection down
Zero	Go to edit mode for currently selected field

(f) Input Screen

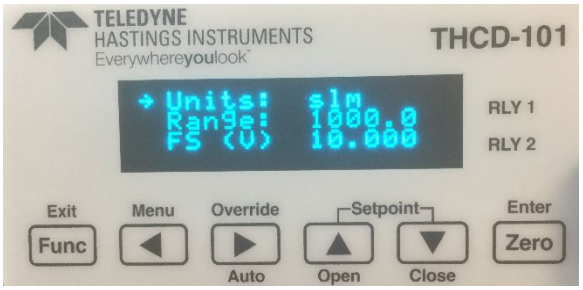

This screen allows you to change the input channel range and full-scale voltage and assign a units label (up to 5 characters) for the channel data. The number of decimal places selected on the range field dictates the number of decimal places shown for the input channel data on the Main screen. To reduce the number of decimal places, change the number under the edit cursor to a decimal point and the system will auto format the field when 'Zero' is pressed.

Switch Functions:

Func	Go back to Main Menu screen
◄	Select previous character when in edit mode
►	Select next character when in edit mode
▲	Move edit field selection up
▼	Move edit field selection down
Zero	Go to edit mode for currently selected field

(g) Comms Screen (IP Address input)

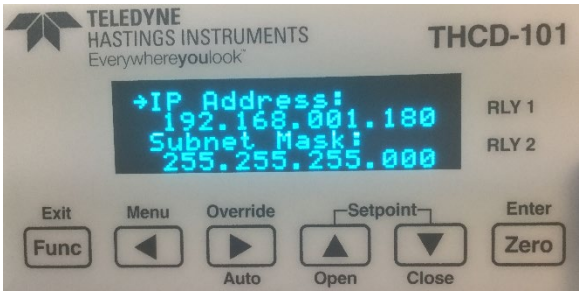

The IP address and the subnet mask of the device can be changed here. The device will need to be reset to enact these changes.

A fixed IP address must be used. DHCP is not an available option. The THCP-101 must be on the same subnet as the computer used to communicate with it since it does not use a Gateway. The chosen fixed IP address must be protected from use by the DHCP\DNS server that is probably used to issue the IP addresses for the computer network or communication failure will occur at some point.

Switch Functions:

Func	Go back to Comms Menu screen
◄	Go to previous menu selection
►	Go to next menu selection
▲	No function
▼	No function
Zero	Go to screen associated with menu selection

(h) Filtering Screen

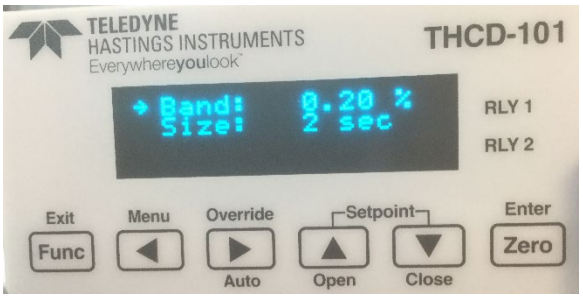

This screen allows the user to modify the band and buffer size of the adaptive filter. The filter only applies to the display and comms output readings. The band is represented as a percentage of FS and can be set between 0.00% (OFF) and 1.00% and also to ON. The buffer size allows settings between 0 and 6 seconds of filtering. For more information on the adaptive filter, see the Principles section (7.6)

Switch Functions:

Func	Go back to Main Menu screen
◄	Select previous character when in edit mode
►	Select next character when in edit mode

▲	Move edit field selection up
▼	Move edit field selection down
Zero	Go to edit mode for currently selected field

(i) Relay Screen

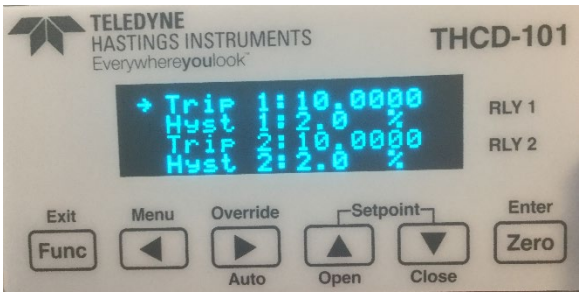

This screen allows you to set the trip point for when the relays switch. The relays also contains some hysteresis to stop them 'chattering'. This is configurable from this screen as well and is represented as a percentage of full scale of the input channel, with limits of 0.0% (i.e. no hysteresis) to 10.0%.

Switch Functions:

Func	Go back to Main Menu screen
◄	Select previous character when in edit mode
►	Select next character when in edit mode
▲	Move edit field selection up
▼	Move edit field selection down
Zero	Go to edit mode for currently selected field

(j) Factory Defaults Confirmation Screen

If Factory Defaults is selected from the Main Menu, this screen appears to ask for confirmation of the requested function. If confirmed then the screen changes to show a percentage of completion of the factory defaults and once completed the THCD-101 will restart.

Switch Functions:

Func	Go back to Main Menu screen
◄	If held, starts factory default when Zero is pressed
►	No function
▲	No function
▼	No function
Zero	Starts factory default if ◄ is held as well.

4. Remote Communications

4.1. Webserver

4.1.1. Main page

The Web server can be used by entering the IP address of the device into a browser address bar. This allows the user control of various settings within the device and to read the devices current reading. Along the top are a series of tabs to allow the user to switch to various sections of device control. Also along the side is the device serial number and controls to start streaming communications, note for TCP streaming to work a TCP connection on port 101 must be pre-established (the unit does not data stream over the HTTP port (80)).

4.1.2. Live data

The live data page is the first page the user will see when the web server is loaded up. The main feature of this page is the live data output from the device, but it also has the capabilities to rezero the channel, to change the setpoint value and to set the setpoint valve position. Note: The setpoint is set in engineering units as configured by the range setting and cannot be set to more than this range configuration.
The units string and device range can be changed from the Channel cfg page.

4.1.3. Channel Configuration page

The channel configuration contains channel setup options.

- Units string allows the user to change the units of the channel.
- Range is the Engineering unit conversion of the Voltage output from the transducer (e.g. in the image above 10 Volts = 100 mbar).
- The number of decimal places set for the range dictates its display precision
- Fullscale is the maximum Voltage output of the transducer.
- Source is where the setpoint is referenced from, Internal will output the number entered as the setpoint value and Slave will output a percentage of the external input.
- Init value is the value to which the setpoint will be set to at start-up.
- Init mode is the valve position, auto is the normal setpoint mode, Open will set maximum range voltage output and closed sets minimum range

4.1.4. Control Configuration page

The control configuration page is made up of multiple sections each controlling a different section of the device.

(a) Communication

The communication page allows the user to change the IP address and Subnet mask of the device. Obviously no octet in the IP Address or Subnet mask can be set to higher than '255'. Once applied the device will need to reset, so the communications page will show a popup (see below) that prompts the user to refresh.

(b) Relays

The Relays page allows the user to change the controls for the two onboard relays.

The hysteresis is a window around the trip point at which the relays will trigger, so to trigger the relay in the image above the input must get to Trip point + 2% (of fullscale) and the relay will not switch off until the input drops to Trip point – 2% (of fullscale).

The trip point is the Engineering unit at which the Relay will trip

(c) Filtering

Filtering is used to reduce noise in the device.

Band relates to the filtering limits. The setting is percentage of fullscale and can be set between 0.01% and 1.00%. Other settings are On so that the filtering will be fully active, filtering all data all the time, and Off where there is no filtering.

The size is the time the data is filtered over, a time greater than 5 will turn the filtering band to on automatically. For more information on how the adaptive filter works, see the Principles section (7.6)

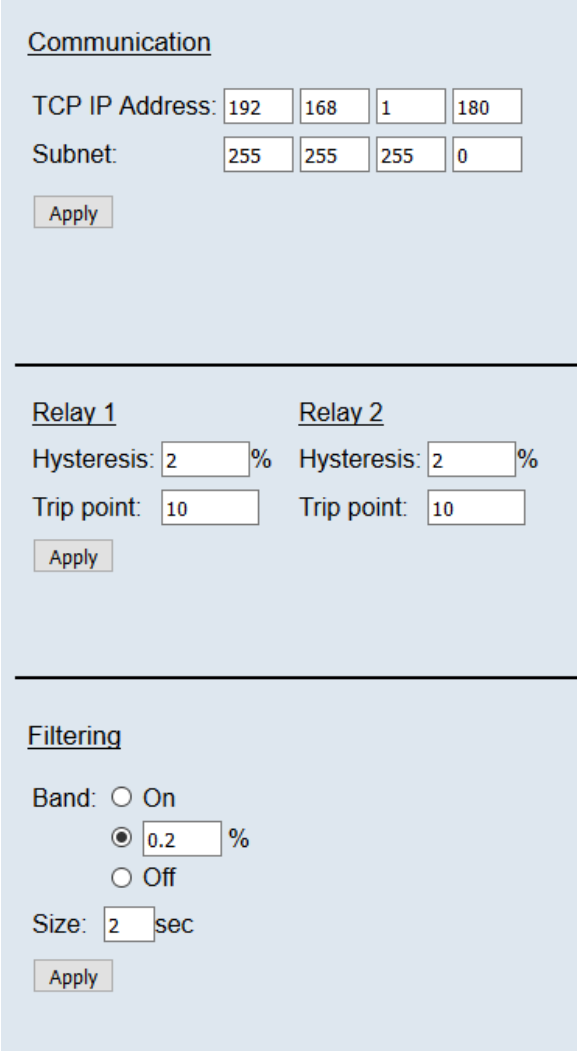

4.2. Serial & TCP Communication

4.2.1. Introduction

The THCD-101 allows full control and feedback via TCP/IP and USB serial port emulation. All parameters that can be set using the front panel are also available via remote communications or on the webserver and all calibrations are performed using remote communication commands or the webserver.
The serial port has a fixed baud rate of 57600 with other settings as follows: 8 data bits, 1 stop bit, No parity, No handshaking.
TCP/IP communication requires an IP address and subnet mask to be configured for the THCD-101. This can be set via the front panel. Note that after changing the IP address or subnet mask, the THCD-101 must be re-initialized by performing a system reset. This is done automatically if setting the IP values using remote communications or the webserver, but if the IP values from the front panel, you must power off & on for the new TCP/IP settings to come into effect.
Note for the host connection, the TCP port of the THCD-101 is port 101.

4.2.2. Command/Query format

The format of the commands and queries is common between all available communication channels for ease of use and understanding when switching communication methods:

Format: accc[?] [p][,p][,p]⏎

… where 'a' = address, 'ccc' = command/query, '?' = query identification; 'p' = parameter (separated by commas if more than one) and ⏎ indicates a carriage return followed by a line feed.

The first letter to be entered on the command line, before any command or query, is the address identifier. This is a legacy character and can no longer be configured. It is now fixed to the character 'a' but must be present.

Most commands are identified by three letters (although this is not always the case) and a query is identified by following the command letters with a '?' character. For all commands with parameters, you must separate the command from its parameters with a space, and separate multiple parameters with commas.

Table 1 in Appendix A summarizes all commands and queries available. Note that where a command is also a query, you do not enter any parameters for the query 'version' unless explicitly stated in the table.

For everything sent on the communications port, the THCD-101 will reply by informing the user of the command/query it has just received, along with any parameters identified, any data requested (if it was a valid command/query) and a line indicating whether the command was accepted. This reply block is the same for anything sent to the THCD-101 and is as follows.

('⏎' indicates a carriage return/line feed pair):

For a command:	For a query:
<a>:<cmd>;<params>⏎	*<a>*:<cmd>;<params>⏎
!<a>!<response>!⏎	<data>⏎
	!<a>!<response>!⏎

where: <a> is the address letter
<cmd> is the command/query (query identified by a '?' after the three chars)
<params> is the comma separated parameter list, if any
<response> is the acceptance indicator.
<data> is the data requested if a query was sent. Note the data usually consists of some identification string, in CAPS, followed by a colon (:) and then the actual data. Some queries return multiple lines of information. See individual commands for details as appropriate. Since many response include carriage return / line feed characters in the middle of the response, the carriage return / line feed cannot be used to signal that the end of the message has been reached. However the "!⏎" combination can be used to indicate message termination.

The acceptance indicator is a single character as follows:

'o' = OK: if the command/query was recognized and accepted;
'b' = BADCMD: if the command/query was not recognized or has incorrect/invalid parameters
'e' = ERROR: if there was some internal communication error.
'w' = BUSY: if the communication channel is currently busy.

4.2.3. Main commands

(a) Output current readings – 'r'

This command tells the THCD-101 to get the current reading of the input channel data and send it to the communications channel. If the input voltage is more than 15% over the full scale voltage, the <reading> below will be replaced with the over range error – "RANGE!".

The readings output format is as follows with the channel data followed by a setpoint mode indication, separated by a semi-colon:

READ:<reading>;<setpoint mode>⏎

The <setpoint mode> is a single number that represents the current mode of the setpoint: 0 = Auto, 1 = Open, 2 = Closed.

(b) Output current readings repeatedly – ‘rp’

The THCD-101 is also able to report the current readings repeatedly, at a given interval. This command starts and stops this repeat activity by setting the parameter accordingly:

0 = Repeat off
1 = Repeat every 100ms
2 = Repeat every 500ms
3 = Repeat every second
4 = Repeat every minute

The timing commences from the point at which the ‘rp’ command is entered. NOTE: when 100ms repeated output is used, the data will be taken every 100ms and buffered up, to be sent out every 500ms in blocks of 5 readings. This has proven to be a more robust output method. For consistency, the output from USB port also works in the same way.

(c) Setpoint value – ‘spv’

This command is used to set the value of the command setpoint. The command takes the setpoint value as the parameter.

The current value of the setpoint can be retrieved using the query ‘spv?’. Returned data is:

SP VALUE: <setpoint value>

(d) Setpoint mode – ‘spm’

This command sets the mode for the command setpoint. The command takes anidentifying mode integer between 0 & 2, as a parameter:

0 = Auto mode
1 = Open mode
2 = Closed mode

The current mode of the setpoint can be retrieved by using the query ‘spm?’. The returned data is:

SP MODE: (<x>) <mode string>

… where … <x> = 0, 1, or 2 and <mode string> = AUTO, OPEN, or CLOSED respectively.

(e) Setpoint source – ‘sps’

The setpoint source can be an internally set value or a percentage of the secondary THCD-101 input (known as slave input). This source is set using this command and as with the other setpoint commands, it takes just one parameter which is as follows:

0 = Internal source
1 = Slave source

The current source of the setpoint can be retrieved by using the query ‘sps?’. The returned data is:

SP SOURCE: (<x>) <source id>

…where… <x> = 0 or 1 as above, <source id> = string identifier for <x> : INTERNAL or SLAVE.

(f) Setpoint initial value – ‘siv’

The setpoint value set with the ‘spv’ command (above) is not non-volatile. This command can be used to set an initial setpoint value on system startup. It takes one parameter which is the initial setpoint value.

The current value of the setpoint can be retrieved using the query ‘siv?’. Returned data is:

SP INIT VAL: <initial setpoint value>

(g) Setpoint initial mode – ‘sim’

As with the value, the setpoint mode set using the ‘spm’ command (above) is a volatile setting. Again this command provides a way of setting an initial startup mode for the setpoint on power up of the THCD-101. It takes one parameter which is a number between 0 & 2, identifying the initial mode, as follows:

0 = Auto mode

1 = Open mode
2 = Closed mode

The current mode of the setpoint can be retrieved by using the query ‘spm?’. The returned data is:

SP INIT MODE: (<x>) <mode string>

… where … <x> = 0, 1, or 2 and <mode string> = AUTO, OPEN, or CLOSED respectively.

4.2.4. Communication commands

(a) Ethernet IP address – ‘eip’

This command changes the IP address used to communicate over TCP/IP. The parameter should be entered as a standard 4 octet IP address. e.g. 192.168.1.180. The max octet value is 255. If a greater value is entered, that value will be capped to 255. Once the THCD-101 has responded to the command, it will display the following and autorestart the system.

UNIT SHOULD AUTO RESTART⏎

IF NOT, RESTART TO APPLY CHANGES⏎

This is necessary to re-initialise the internal TCP socket with the newly set IP address. To retrieve the current IP address, use the query ‘eip?’. The returned data is:

IP ADDRESS: <xxx>.<xxx>.<xxx>.<xxx>

…where <xxx> is always a three digit octet.

(b) Ethernet subnet mask – ‘esm’

This command changes the Subnet mask used as part of the TCP/IP communication. As with the IP address, the parameter should be entered as a standard 4 octet mask. e.g. 255.255.255.0. Each octet value is again capped if a value greater than 255 is entered.

The THCD-101 will respond and the display the following before auto-restarting the system (as with the IP address).

UNIT SHOULD AUTO RESTART⏎

IF NOT, RESTART TO APPLY CHANGES⏎

The current subnet mask can be retrieved using the query ‘esm?’. The returned data is:

SUBNET MASK: <xxx>.<xxx>.<xxx>.<xxx>

…where <xxx> is always a three digit octet.

4.2.5. Channel Setup commands

(a) Input channel units string – ‘uiu’

The input channel has an associated free-form text field that can be used to identify the units being used. This command is used to set this and its only parameter is a max of 5 characters for the units string.

The current units string can be retrieved using the query ‘uiu?’. The data returned is as follows:

INPUT UNITS STR: <units>

… where… <units> = the exact units string as displayed on the front panel

(b) Input channel range – ‘uir’

Use this command to set the range of the input channel. The single parameter is the actual value for the range. The number of decimal places passed in the range value dictates the number of decimal places shown for the main data output (up to a max of 4 decimal places – any more will get chopped off)

The current range of the input channel is retrieved using the query ‘uir?’. The data returned is as follows:

INPUT RANGE: <range>

… where… <range> = the range of the channel (engineering units)

(c) Input channel full scale – ‘uif’

This command is used to set the full-scale voltage for the input channel. The single parameter is the actual full-scale value. The full scale voltage setting for the input channel is retrieved using the query ‘uif?’. The data returned is as follows:

INPUT FULLSCALE: <fs>

… where: <fs> = the full scale voltage of the channel

4.2.6. Filtering commands

(a) Filter band – ‘flb’

This command is used to set the point at which the adaptive filtering kicks in. It takes one parameter which is the percentage of full scale of the input. Valid values are between 0.01% and 1.00%. Additionally the parameter can be OFF which will mean the filtering will never kick in, or ON which means the filtering is always used. Note that if the filter size is set to greater than 5 seconds, the filter band command will return a Bad Command acknowledgement because the filter is always on in this situation and it therefore makes no sense to attempt to change the band setting.

To retrieve the current filter band, use the query ‘flb?’. The returned data is:

FILTERING BAND: <band>%

(b) Filter size – ‘fls’

Use this command to set the size of the adaptive filtering buffer. The one parameter this command takes is the buffer size in seconds, between 0 and 6 seconds. (0 can be used to effectively turn the adaptive filtering off).

To retrieve the current filter size, use the query ‘fls?’. The returned data is:

FILTERING SIZE: <x> sec

… where <x> = number of seconds of filtering

[Note if current size is 0 then returned data is: FILTERING SIZE: 0 (NO FILTER)]

4.2.7. Relay control commands

(a) Relay trip point – ‘rlt’

This command sets the point at which the relay switches from one state to the other. When the source data is below this point then the relay is closed, so therefore when the source data rises above this point then the relay is open. The command takes two parameters – the first is the relay whose trip point is to be set (1-2) and the second is the trip point in engineering units, as configured with the Input Channel range command (see 6.5(b)). Note that the first parameter is always required even if the second relay has not been factory fitted.

The current trip point values can be retrieved using the query ‘rlt?’. The returned data is one line for each relay, as follows:

RELAY <x> TRIP POINT: <trip point, in engineering units >

… where ... <x> = the relay number

(b) Relay hysteresis – ‘rlh’

This command configures the hysteresis setting of the relay. It takes two parameters – the first if the relay in question, the second is the percentage hysteresis, represented as a percentage of full scale of the source channel, with limits of 0.0% (i.e. no hysteresis) to 10.0%.

The current hysteresis setting can be retrieved using the query ‘rlh?’. The returned data is one line for each relay, as follows:

RELAY <x> HYSTERESIS: <hysteresis percentage>%

… where ... <x> = the relay number

4.2.8. Other commands

(a) User input rezero – ‘irz’

To perform a user input rezero function, use this command. Typically the command takes no parameters to perform the function, although it can take an optional parameter of ‘0’ which clears any value already generated by a previous rezero. To find the current user rezero value use the query ‘irz?’. The data returned is as follows:

REZERO: <rezero>

…where… <rezero> = the current rezero value

(b) Date of last factory calibration – ‘dlc?’

This query is used to retrieve the date of the last factory calibration run. The data is returned as follows:

LAST CAL DATE: <yymmdd>

…where yy = year, mm = month & dd = day.

E.g. 051201 means the last calibration run was December 1, 2005.

(c) Retrieve all settings – ‘ras’

As well as issuing some of the above commands as queries to retrieve individual settings, this command has been provided which will return a comma separated list of most of the settings for the input channel, setpoint, etc. The exact settings provided by this command are detailed in the table below.

Description	Type and size
Input channel units string	5 char string
range	8 char string representation of a float
full scale	8 char string representation of a float
Setpoint value	8 char string representation of a float
slave value	8 char string representation of a float
mode	1 byte (0-2 as for spm? query)
source	1 byte (0-1 as for sps? query)
initial value	8 char string representation of a float
initial slave value	8 char string representation of a float
initial mode	1 byte (0-2 as for sim? query)
Adaptive filter band	4 char string representation of a float
size	1 byte (0-6 as for fls? query)
Relay 1 trip point	8 char string representation of a float
hysteresis value	4 char string representation of a float
Relay 2 trip point	8 char string representation of a float
hysteresis value	4 char string representation of a float
Last factory calibration date	6 char string (format as for dlc? query)

4.2.1. Command Set Summary

Purpose	Cmd	Query	Parameters	Notes

Output current readings	r	---	---	
Output current readings repeatedly	rp	---	0 - 4	P1: 0 = Repeat off 1 = Repeat every 100ms 2 = Repeat every 500ms 3 = Repeat every second 4 = Repeat every minute
Setpoint value	spv	spv?	#	P1: Real value to set
Setpoint mode	spm	spm?	0 - 2	P1: 0 = Auto mode 1 = Open mode 2 = Closed mode
Setpoint source	sps	sps?	0 - 1	P1: 0 = Internal source 1 = Slave (External) source
Setpoint initial value	siv	siv?	#	P1: Real value to set
Setpoint initial mode	sim	sim?	0 - 2	P1: 0 = Auto mode 1 = Open mode 2 = Closed mode
Retrieve all settings	ras	---	---	Comma separated string returned See Table 3 for actual settings
Ethernet IP address	eip	eip?	IP octets	P1: xxx.xxx.xxx.xxx
Ethernet subnet mask	esm	esm?	IP octets	P1: xxx.xxx.xxx.xxx
Input channel units string	uiu	uiu?	ccccc	P1: Max length 5 chars
Input channel range	uir	uir?	#	P1: Real value for range to set
Input channel full scale	uif	uif?	#	P1: Real value for full-scale to set
Adaptive filter band	flb	flb?	#	P1: Band percentage (0.01-1.00) or OFF, or ON
Adaptive filter size	fls	fls?	0 - 6	P1: Buffer size in seconds
Relay switch threshold	rlt	rlt?	1 – 2,#	P1: Relay number P2: Real number for switching point
Relay hysteresis	rlh	rlh?	1 - 2, 0.0 - 10.0	P1: Relay number P2: Hysteresis percentage value
User input re-zero function	irz	irz?	[0]	P1 (optional): clears current user input rezero setting
Date of last calibration	---	dlc?		Returned date format: yymmdd

5. Troubleshooting

5.1. Authorized Maintenance

With proper care in installation and use, the pressure gauge will require little or no maintenance. If maintenance does become necessary, it is best to consult the factory before doing so, since some procedures may require recalibration. Entry into the gauge or tampering with the printed circuit board will void the warranty.

NOTICE: Do not perform repairs on these assemblies while the unit is still under warranty. If there is a problem, check the listing below to rule out some of the straight-forward solutions that may exist.

5.2. Troubleshooting

5.2.1. Instrument Lists and Codes

If a problem occurs and obvious solutions are not apparent, the internal instrument values can be accessed digitally. Using a terminal emulation program, type **SFL**. This command will return a long list of values. These values can then be sent to the factory to better determine what the problem may be.

Also, issues that may have occurred are recorded in memory and may be accessed using the commands **STATUS, HISTORY** and **FAIL CODES**. See Commands section above.

5.2.2. Possible Problems and Solutions

Symptom: Not able to communicate digitally.

Action: Check settings as found in Serial Communications section above. Make certain baud rate and 232/485 operation are correct. If using RS485 with a long cable run, make certain termination resistors are enabled on the last instrument on the bus.

Symptom: Pressure gauge is out of calibration and/or non-linear.

Action: Check all fittings for leaks. Pump system down well below 0.1 Torr and re-zero the gauge.

Symptom: The output is non-repeatable at zero or span (unit drifts).

Action: Make certain the instrument is properly warmed up. Pump system down well below 0.1 Torr and re-zero the gauge.

Symptom: Intermittent, “jumpy” or “noisy” output from instrument.

Action: Determine if something could cause the actual pressure to fluctuate. Ensure that the instrument is well grounded and that all electrical connections are secure.

Symptom: LED indication is red.

Action: Cycle power. If symptom persists, check FAIL CODES and consult the factory.

6. Warranty

6.1. Warranty Policy

See the company website for warranty information at:

http://www.teledyne-hi.com/terms&conditions.htm

6.2. Return Policy

See the company website for return information at:

http://www.teledyne-hi.com/terms&conditions.htm

Any product returned for either warranty or non-warranty repair must have been issued a Return Material Authorization (RMA) form.

RMA Forms may be obtained from the Information section of the Hastings Instruments website:

http://www.teledyne-hi.com/inforeq.htm

WARNING: Contaminated parts can be detrimental to health and environment. Ensure instruments are free of hazardous contamination prior to shipment.

Company contact information

TELEDYNE HASTINGS INSTRUMENTS

804 NEWCOMBE AVENUE

HAMPTON, VIRGINIA 23669 U.S.A.

ATTENTION: REPAIR DEPARTMENT

TELEPHONE	(757) 723-6531 1-800-950-2468
FAX	(757) 723-3925
E MAIL	mailto:hastings_service@teledyne.com
INTERNET ADDRESS	http://www.teledyne-hi.com

7. Drawings

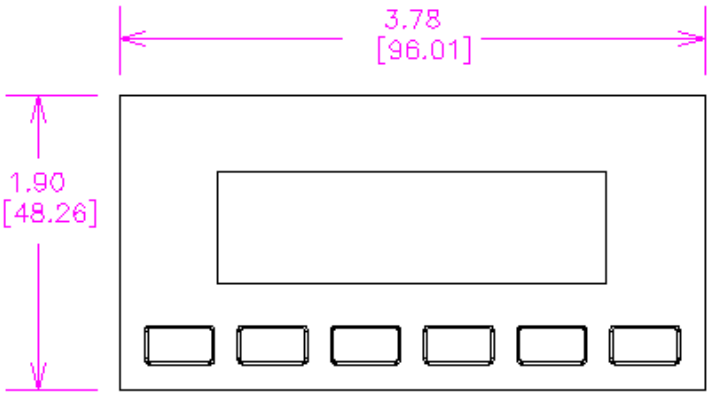
3.78
[96.01]
1.90
[48.26]

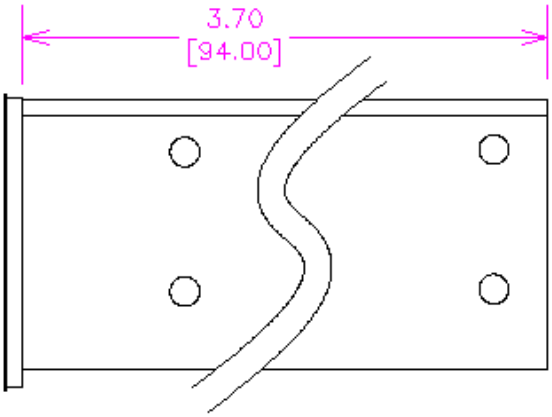
3.70
[94.00]

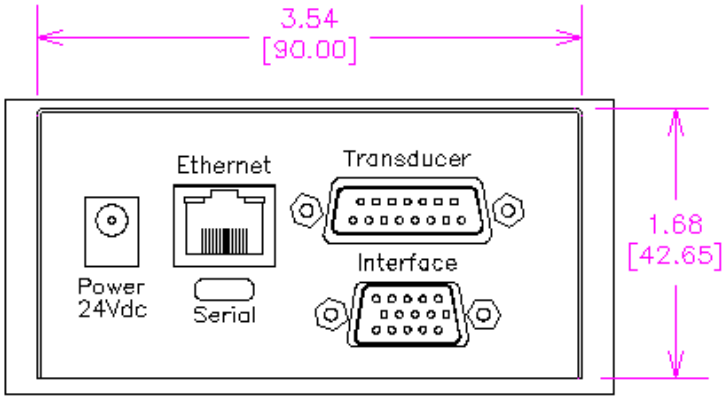
3.54
[90.00]
Ethernet
Transducer
Interface
Power
24Vdc
Serial
1.68
[42.65]